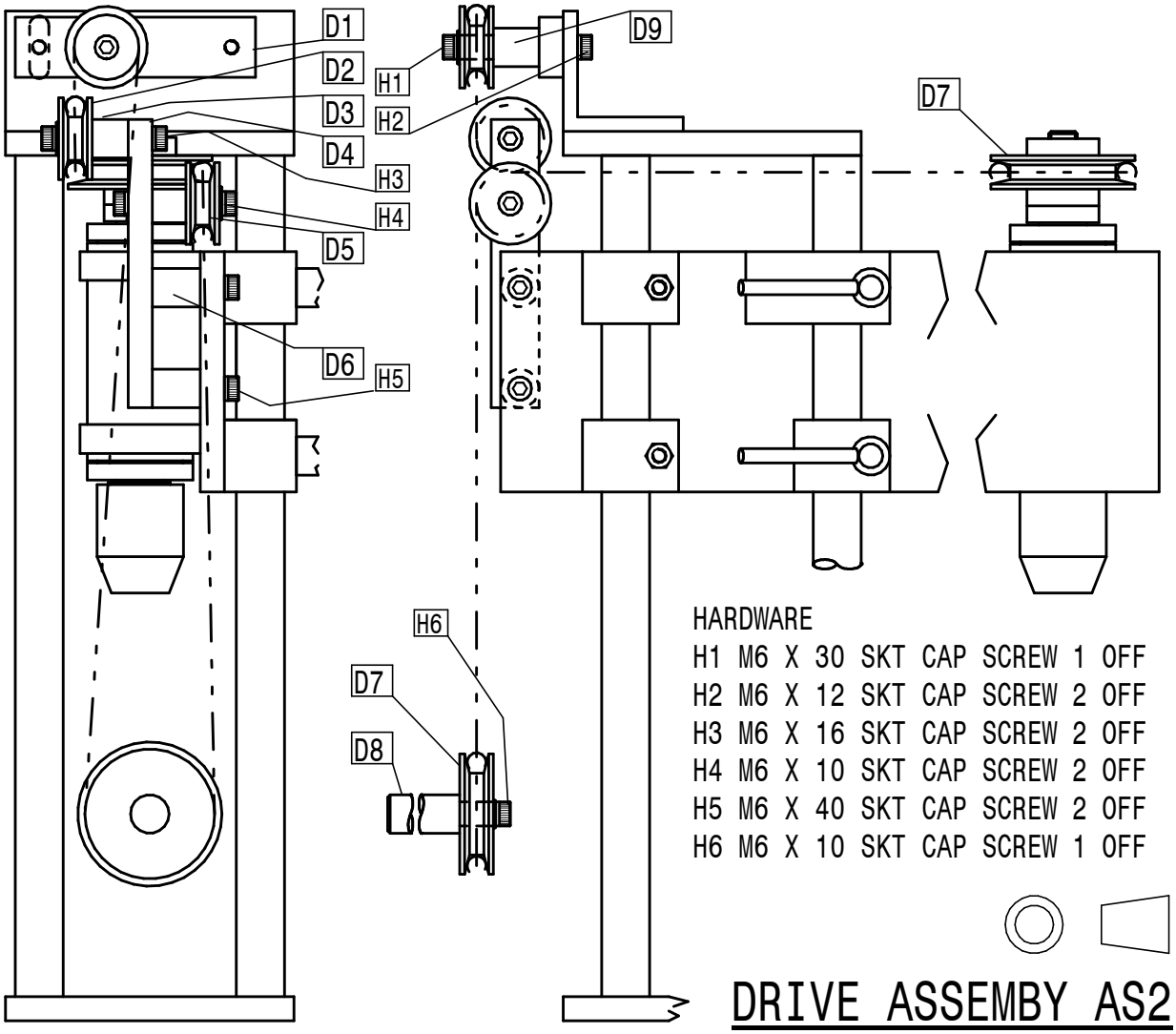

2

MILLING HEAD

07-07-2011

MILLHD02