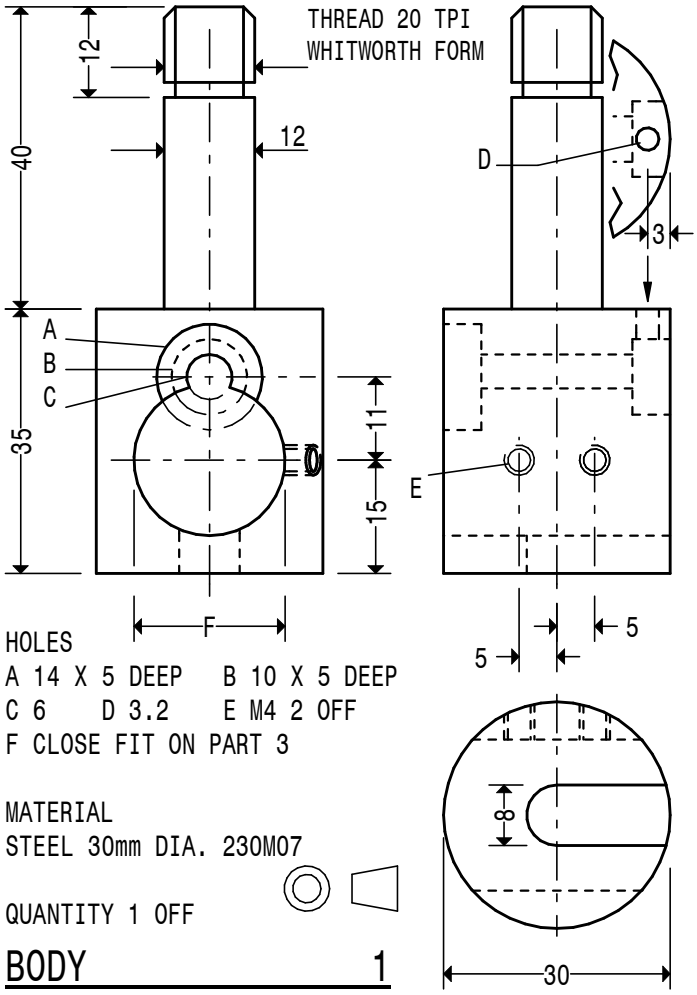


HOLES
A 14 X 5 DEEP  B 10 X 5 DEEP
C 6  D 3.2  E M4 2 OFF
F CLOSE FIT ON PART 3

MATERIAL
STEEL 30mm DIA. 230M07

QUANTITY 1 OFF

BODY 1

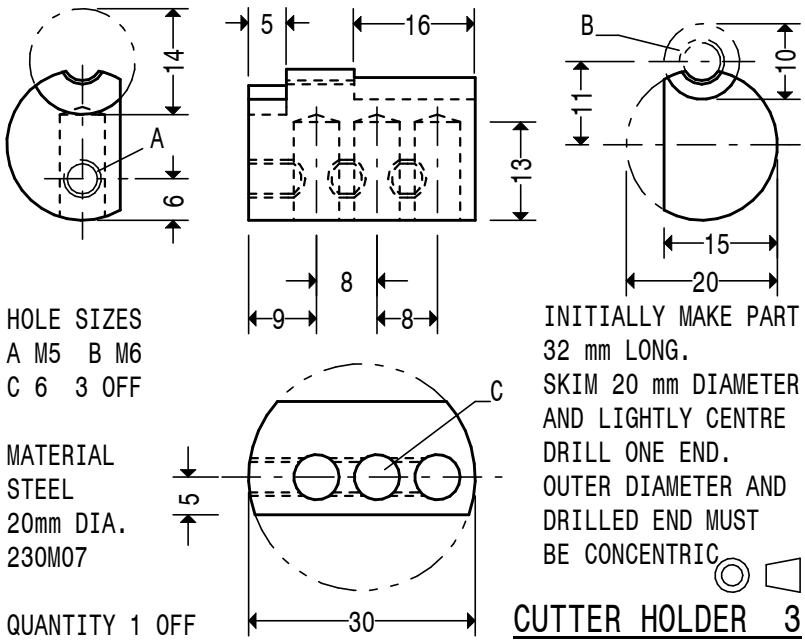


HOLE SIZES
A M5  B M6
C 6  3 OFF

MATERIAL
STEEL
20mm DIA.
230M07

QUANTITY 1 OFF

INITIALLY MAKE PART
32 mm LONG.
SKIM 20 mm DIAMETER
AND LIGHTLY CENTRE
DRILL ONE END.
OUTER DIAMETER AND
DRILLED END MUST
BE CONCENTRIC

CUTTER HOLDER 3

# MINI BORING HEAD

18-07-2011
MINIBH02